Hyundai Kona: Dual Clutch Transmission Control System / Input shaft speed sensor 2 Schematic diagrams

transmissionmanuals.com

Circuit Diagram

[Circuit Diagram]

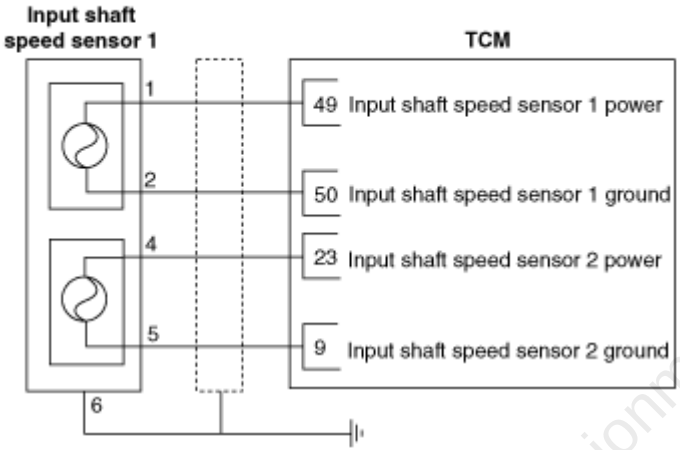

[Connection Information]

Terminal	Connected to	Function
1	TCM(49)	Input shaft speed sensor 1 power
2	TCM(50)	Input shaft speed sensor 1 ground
3	-	-
4	TCM(23)	Input shaft speed sensor 2 power
5	TCM(9)	Input shaft speed sensor 2 ground
6	Sensor ground	Sensor Shield

[Harness Connector]



C528
Input shaft speed sensor connector

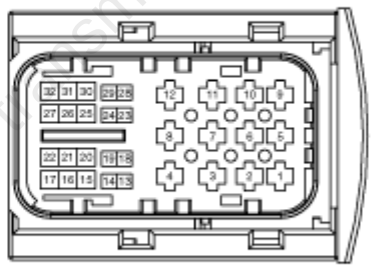

Connector [A]
TCM

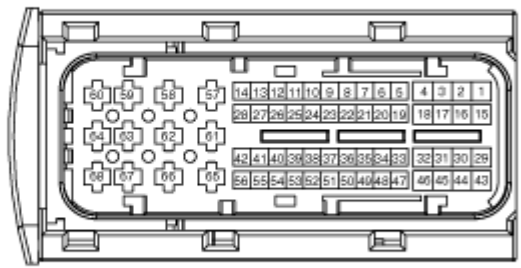

Connector [B]
TCM

transmissionmanuals.com